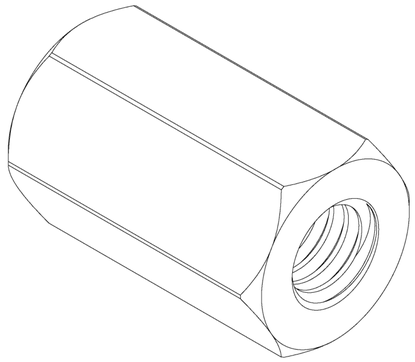

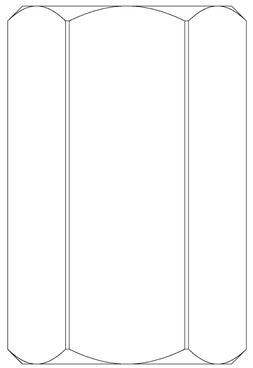

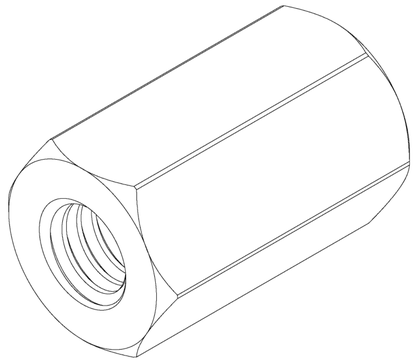

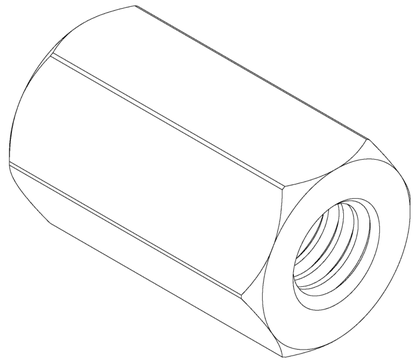

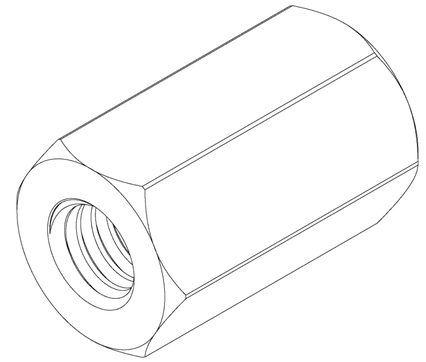

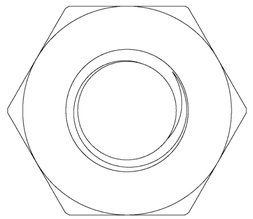

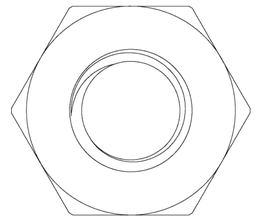

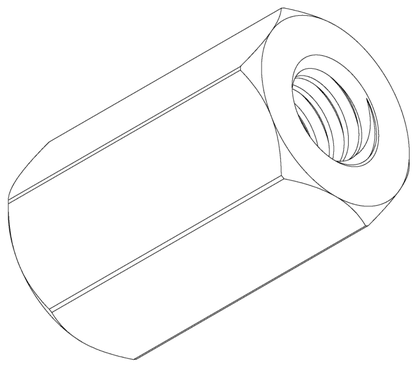

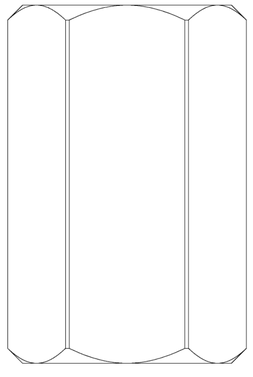

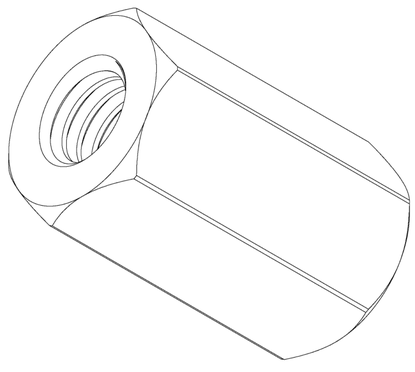

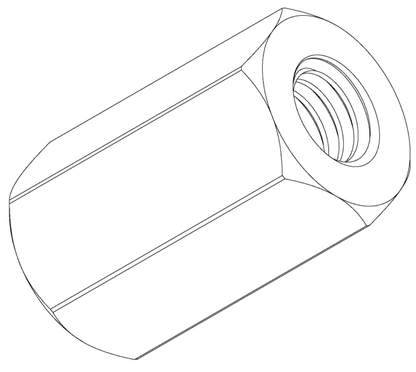

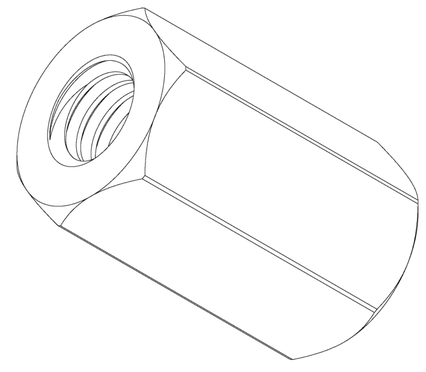

Product SKU	Product Weight	Product Material
1516-4008-0120	1.1g Each	Aluminum